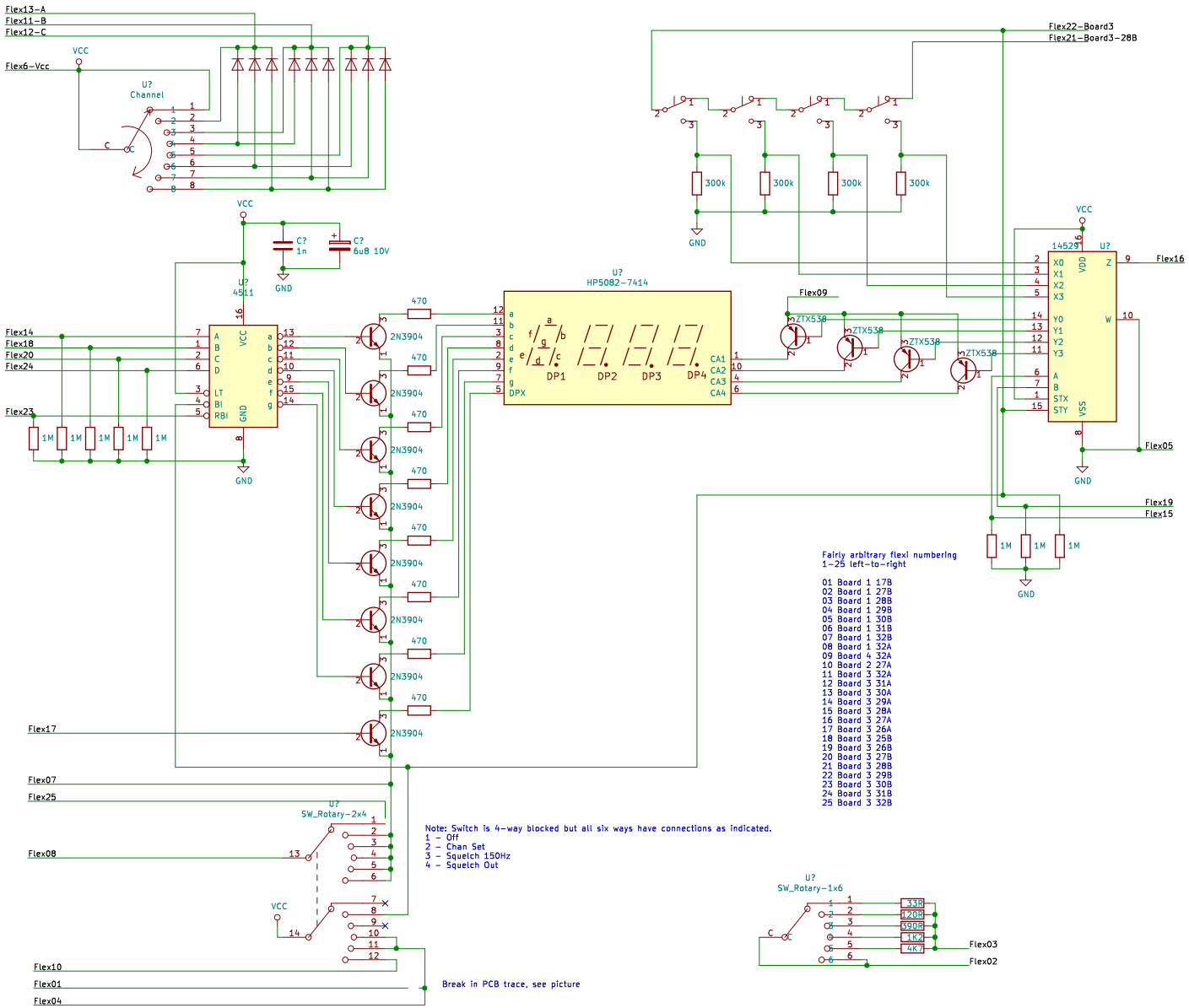

Fairly arbitrary flexi numbering
1-25 left-to-right

01 Board 1 17B
02 Board 1 27B
03 Board 1 28B
04 Board 1 29B
05 Board 1 30B
06 Board 1 31B
07 Board 1 32B
08 Board 1 32A
09 Board 4 32A
10 Board 2 27A
11 Board 3 32A
12 Board 3 31A
13 Board 3 30A
14 Board 3 29A
15 Board 3 28A
16 Board 3 27A
17 Board 3 26A
18 Board 3 25B
19 Board 3 26B
20 Board 3 27B
21 Board 3 28B
22 Board 3 29B
23 Board 3 30B
24 Board 3 31B
25 Board 3 32B

Note: Switch is 4-way blocked but all six ways have connections as indicated.
1 - Off
2 - Chan Set
3 - Squelch 150Hz
4 - Squelch Out

Break in PCB trace, see picture

Reverse Engineered from Serial 0843Z

Sheet: /
File: PTR1851.sch

Title: Plessey PTR1851J Control PCB

Size: User	Date: 2020-08-07	Rev:
KiCad E.D.A. kicad (5.0.0)		Id: 1/1